Soft Closing Systems for Sliding Doors and Drawers

Slidix Soft Closing Systems

Titus Damper Inside

- A fully programmable/controllable damping curve
- Precise definition of forces over the whole damping action
- Easy to fine tune performance to specific application

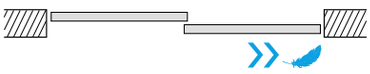

Fully controllable damping path

- Smooth and even soft closing on various dimensions and weights
- Reliable damping at any closing speed
- Silent closing without a rebounce

Consistent performance

- Reliable closing of doors from 15 to 120 kg at any closing speed
- The door will close even at minimum speed

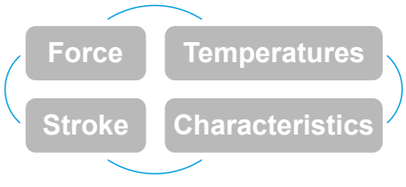

Comfortable door opening

- Low pull-open force
- Effortless opening

Wide range of customization options

- Easy to fine-tune to specific application
- Several options of damper forces, spring forces and damper characteristics

Compact size

- Low spacial and protrusion impact on the application
- Fits numerous application options
- Manufacturer needs less adaptation to fit mechanism to its door situation

Slidix System
Information

Overview

Functional principles

Damping mechanism works in conjunction with activator; mounting of each on moving or fixed object of application depends on the application specifics.

Activator catches the trigger - pushes the piston rod to activate damping function.

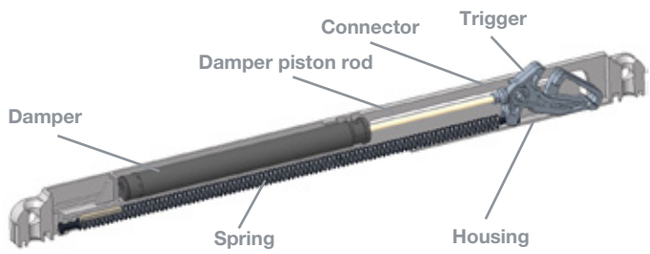

Technical details

Temperature range	-30 °C to 70 °C
Stroke length	50mm or 100mm
Load capacity	15kg to 120kg
Damper force	2.5N to 22.5N
Spring force	4.3N to 17N
Damping characteristics	flat, progressive, MultiStage, with final release

Direction of movement

Depending on the application the user can choose from various options of movement: from outside-in, inside-out or both directions.

A position of trigger on Slidix defines the direction of movement. Pictures below show trigger in released position.

Inside-out
Slidix TB
Slidix TC
Slidix TE

Trigger is positioned on the inside of Slidix mechanism for damping towards end of the mechanism.

Outside-in
Slidix II
Slidix TA
Slidix TF

Trigger is positioned on the outside of Slidix mechanism for damping towards inside of the mechanism.

In both directions
Slidix Centro

Slidix Centro has double trigger centered in the middle to enable damping from left/right towards centre.

Overview

Areas of application

Architectural doors: interior wall partitions, and sliding doors, pocket doors, barn doors

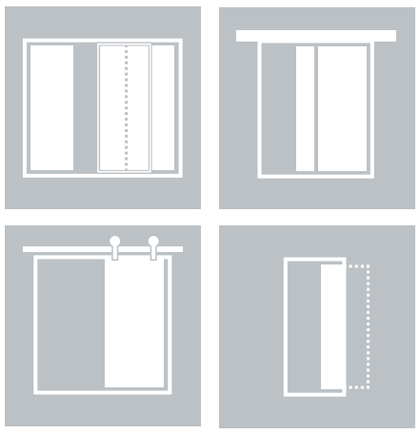

Wardrobes and walk-in closets

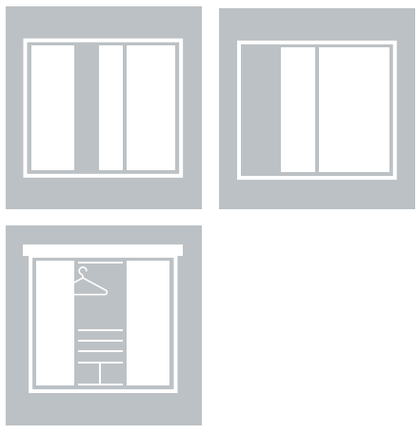

Drawers and pull-out systems

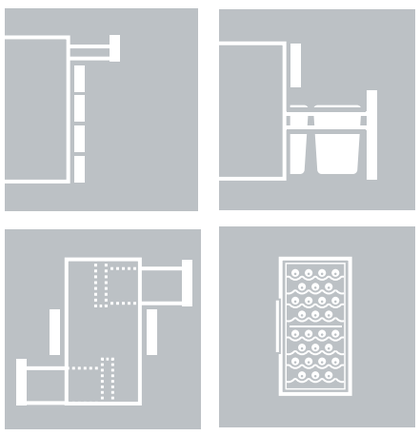

Shower doors

Operating scope

Slidix	Direction of movement	Damping stroke	Load capacity
Slidix Centro	Outside-in (in both directions)	50mm in 2 directions	15kg to 40kg
Slidix II	Outside-in	50mm	15kg to 80kg
Slidix TA	Outside-in	100mm	40kg to 120kg
Slidix TB	Inside-out	100mm	40kg to 80kg
Slidix TC	Inside-out	50mm	15kg to 60kg
Slidix TE	Inside-out	50mm	15kg to 60kg
Slidix TF	Outside-in (in both directions)	100mm in 2 directions	40kg to 120kg

Slidix Centro

For middle sliding door damping and centering

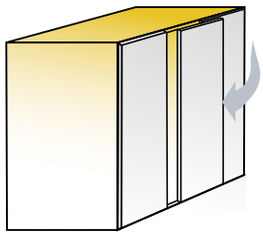

- Movement type: In both directions
- Stroke length in mm: 50 left + 50 right
- Damper type: Hydraulic

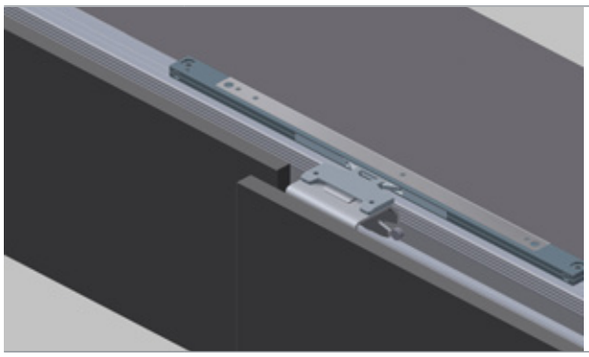

Technical details

Door weight (kg)	Spring force (N)	Item number
15	12	975-9216-040
25	12	975-9217-040
40	15	975-9218-040

Slidix Centro

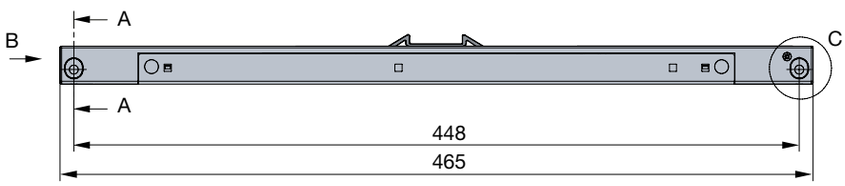

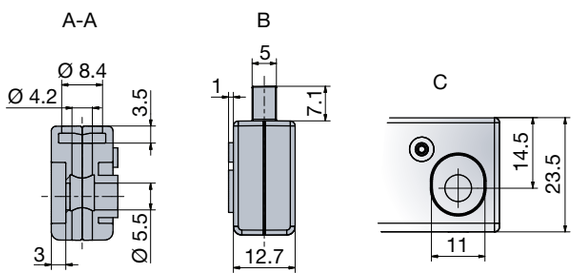

20 Pcs Made of plastic, steel cover

Activators

Activator TSC Plus
see page 4.21

- Consistent and reliable soft closing of middle cabinet door
- Optimal middle door centering assures confident door alignment
- Damping of middle door in both directions with one additional Slidix mechanism
- Titus hydraulic dampers ensure smooth and even soft closing action in both directions

Load capacity

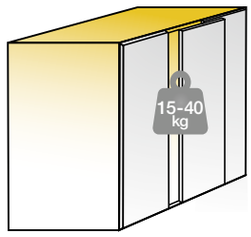

Works in range from 15-40 kg per door

Works only with activator TSC Plus
→ see page 4.21

Application details

Drawing shows the needed mounting distance between Slidix mechanism and activator TSC Plus.

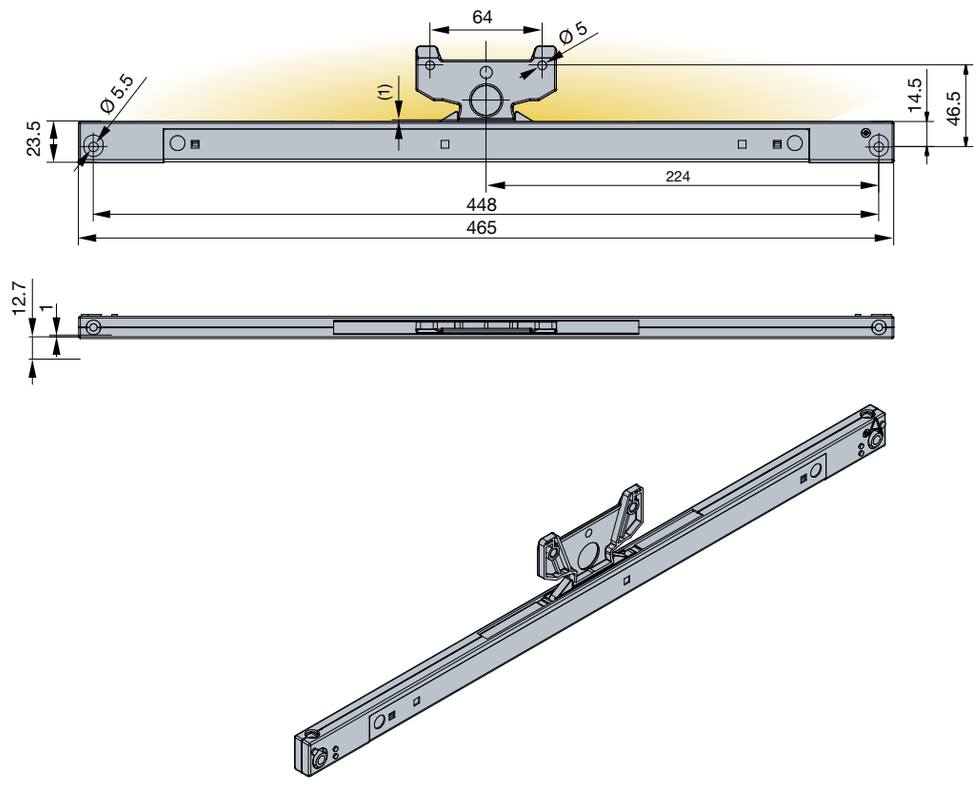

Applications

3-door sliding door cabinet

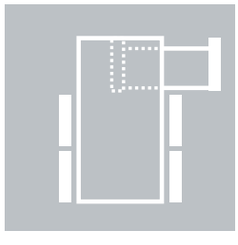

two way runners

Slidix II

For drawers and sliding doors

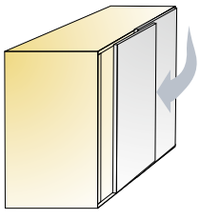

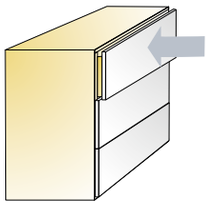

- Movement type — Outside-in
- Stroke length in mm — 50
- Damper type — Hydraulic

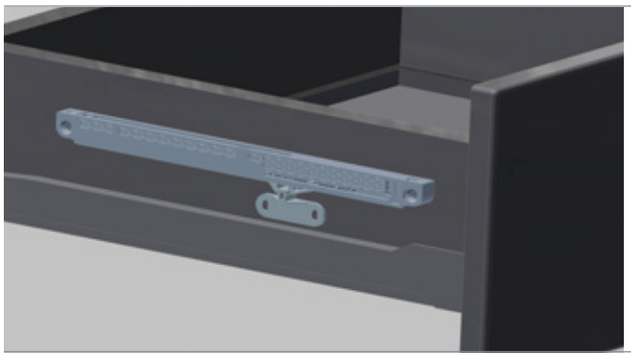

Technical details

Slidix II

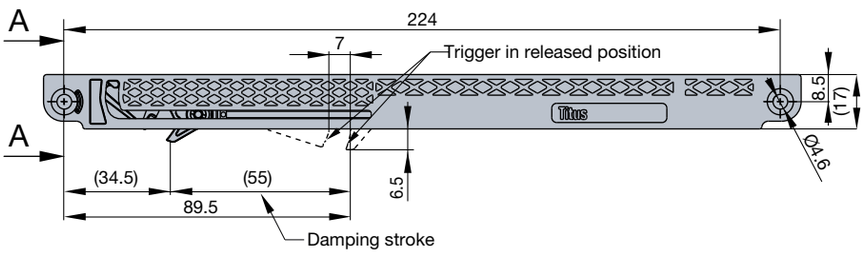

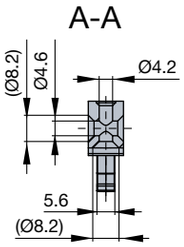

Door weight (kg)	Spring force (N)	Item number
15	4.3	975-9456-380
25	7.5	975-9457-380
40	10	975-9459-380
60	13	975-9461-380
80	13	975-9462-380

100 Pcs Made of plastic

Activators

Slidix activators
see pages 4.21 and 4.22

- Smooth and reliable closing
- Compatible with most of the drawer slides and sliding door applications
- Titus hydraulic dampers ensure smooth and even soft closing action

Load capacity

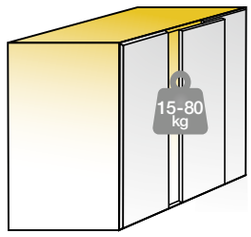

Works in range from 15-80 kg per door

Application details

Drawing shows the needed distance in mounting between Slidix mechanism and activator SP14.
Other activators available, trial mounting is recommended.

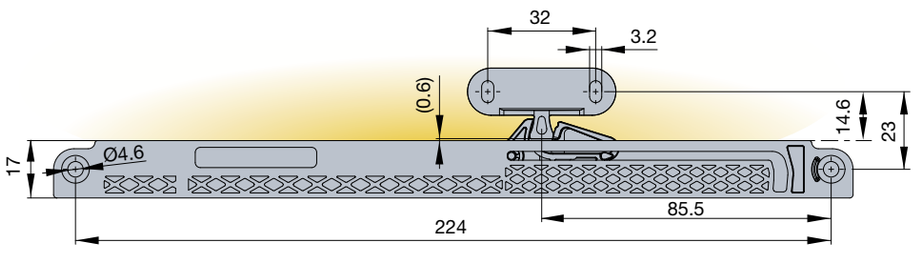

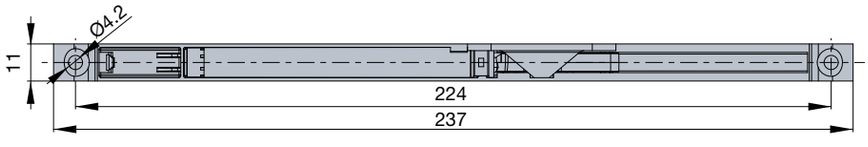

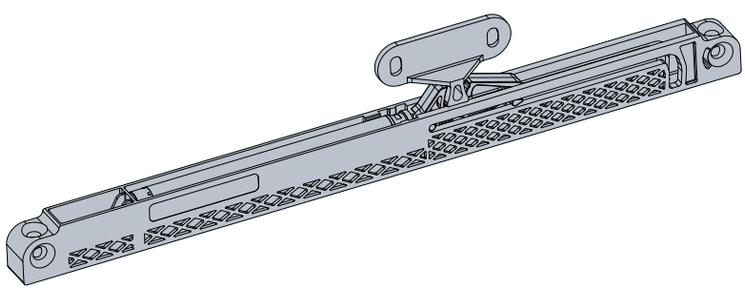

Applications

Interior sliding doors

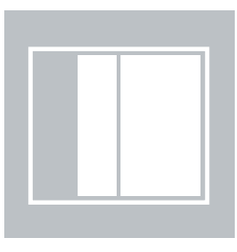

wardrobes

drawers

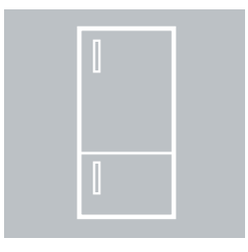

refrigerators

Slidix TA

For heavy sliding doors

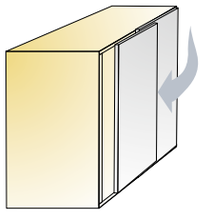

- Movement type: Outside-in
- Stroke length in mm: 100
- Damper type: Hydraulic

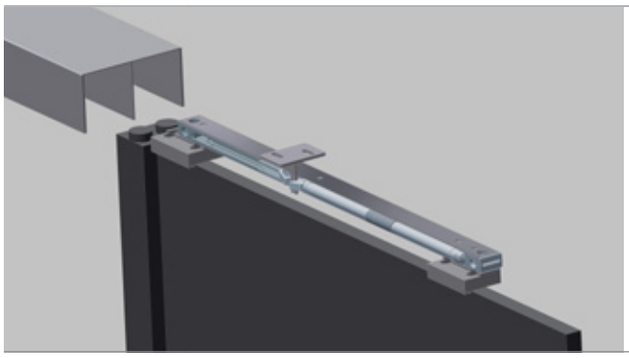

Technical details

Door weight (kg)	Spring force (N)	Item number
40	10	975-9436-040
60	13	975-9437-040
80	13	975-9440-040
100	17	975-9442-040
120	17	975-9443-040

Slidix TA

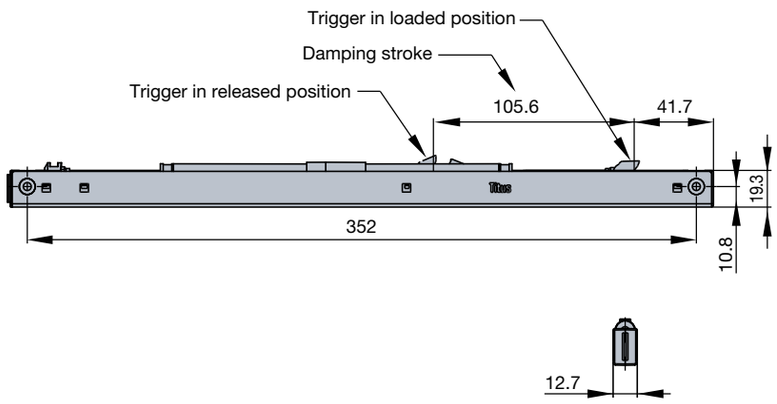

100 Pcs Made of plastic, steel cover

Activators

Slidix activators
see pages 4.21 and 4.22

- Consistent and reliable soft closing of sliding doors with heavier weight
- Reinforced with a metal housing for secure performance on any door material, including glass
- Titus hydraulic dampers ensure smooth and even soft closing action

Capacity

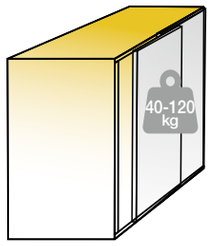

Works in range from 40-120 kg

Application details

Drawing shows the needed distance in mounting between Slidix mechanism and activator SP14.
Other activators available, trial mounting is recommended.

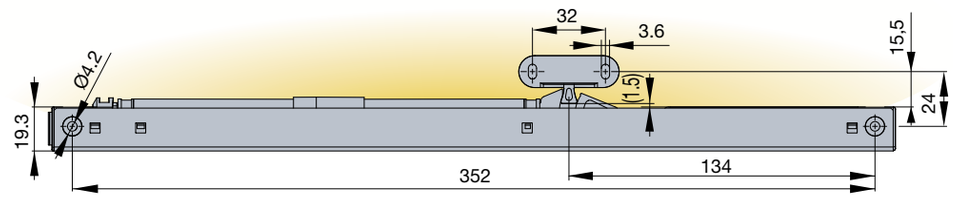

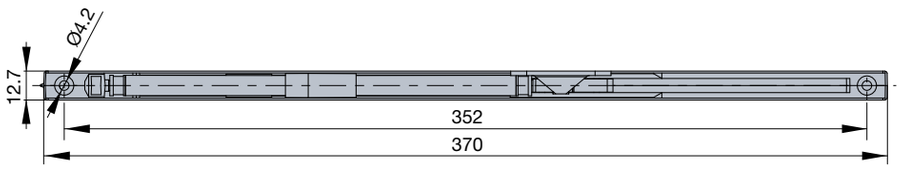

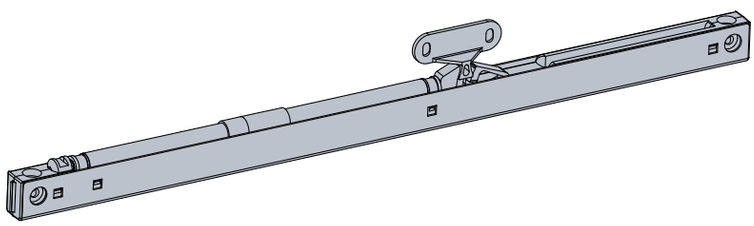

Applications

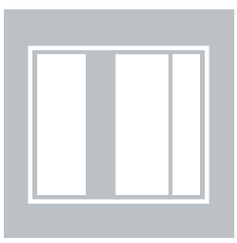

interior sliding doors

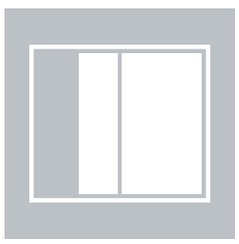

wardrobes

room dividers

Slidix TB

For wardrobes with sliding doors

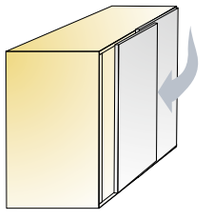

- Movement type: Inside-out
- Stroke length in mm: 100
- Damper type: Hydraulic

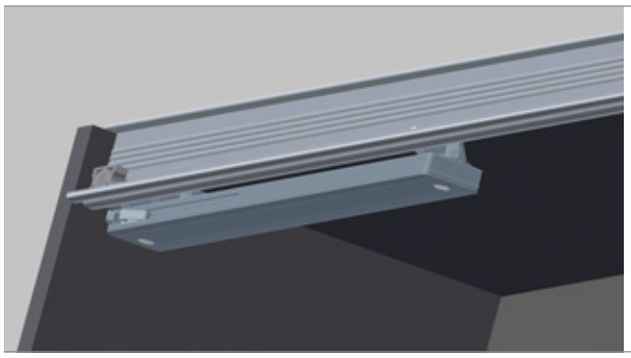

Technical details

Door weight (kg)	Spring force (N)	Item number
Slidix TB		
40	15	975-9492-380
60	15	975-9271-380
80	15	975-9272-380

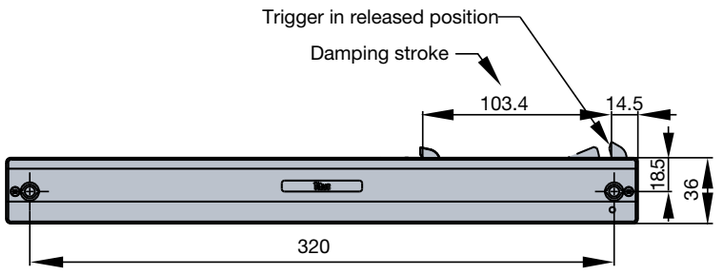

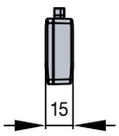

100 Pcs Made of plastic

Activators

Slidix activators
see pages 4.21 and 4.22

- Consistent and reliable damping of heavier doors
- For soft closing of wardrobes with 2 doors, can be added to top running sliding door systems
- Titus hydraulic dampers ensure smooth and even soft closing action

Capacity

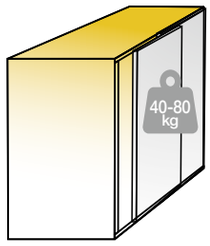

Works in range from 40-80 kg

Application details

Drawing shows the needed distance in mounting between Slidix mechanism and activator SP14.
Other activators available, trial mounting is recommended.

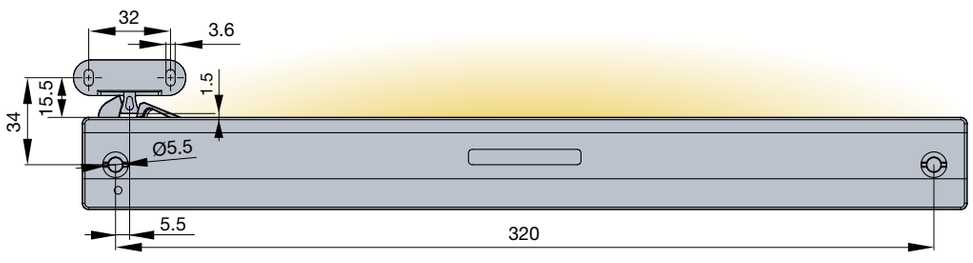

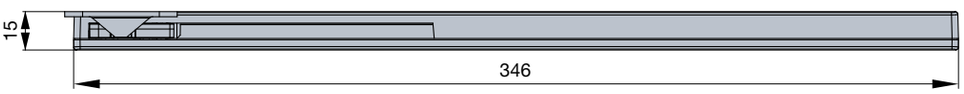

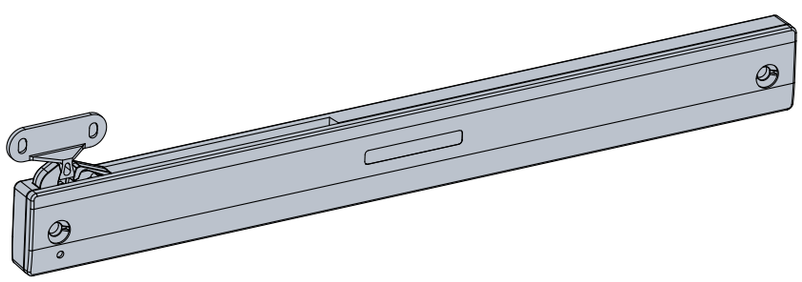

Applications

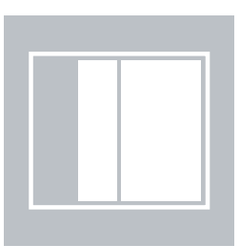

wardrobes

Slidix TC

For wardrobes with sliding doors

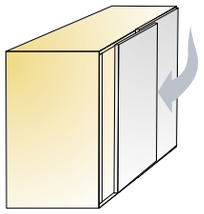

- Movement type: Inside-out
- Stroke length in mm: 50
- Damper type: Hydraulic

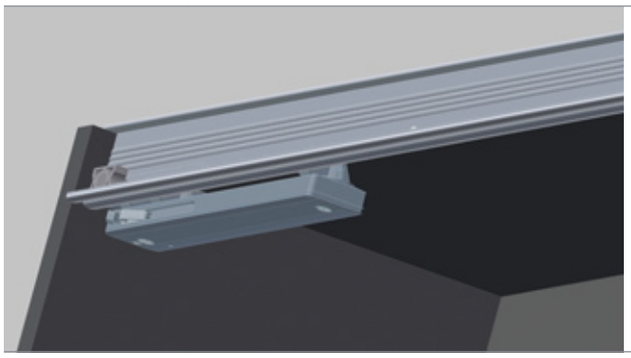

Technical details

Slidix TC

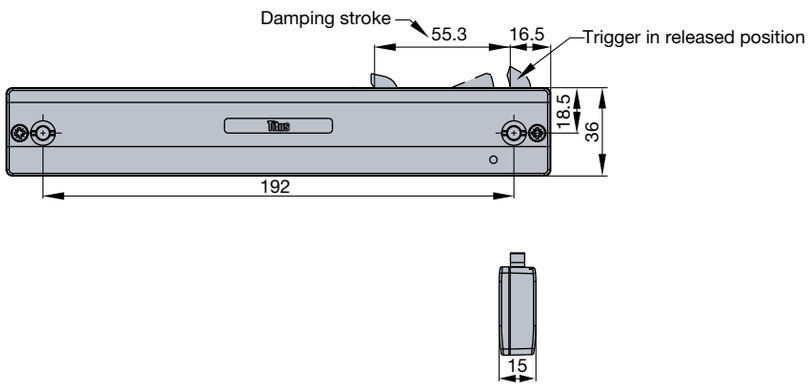

Door weight (kg)	Spring force (N)	Item number
15	4.3	975-9333-380
25	7.5	975-9341-380
40	10	975-9342-380
60	13	975-9347-380

100 Pcs Made of plastic

Activators

Slidix activators
→ *see pages 4.21 and 4.22*

- Consistent and reliable soft closing of sliding doors with lighter weight
- For soft closing of smaller and lower wardrobes with lighter doors, can be added to top running sliding door systems
- Titus hydraulic dampers ensure smooth and even soft closing action

Capacity

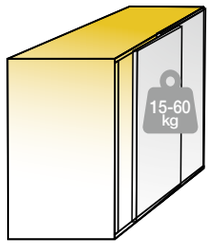

Works in range from 15-60 kg

Application details

Drawing shows the needed distance in mounting between Slidix mechanism and activator SP14.
Other activators available, trial mounting is recommended.

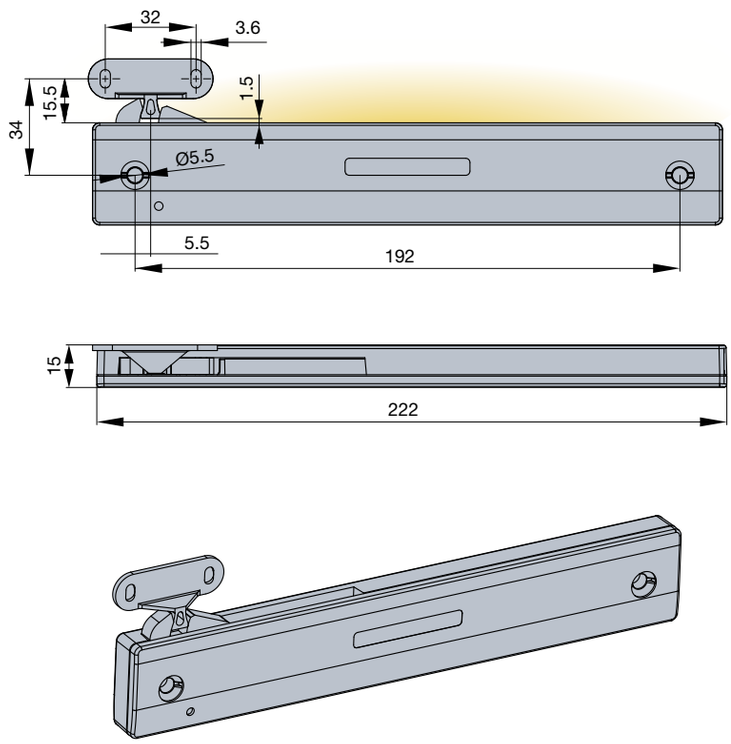

Applications

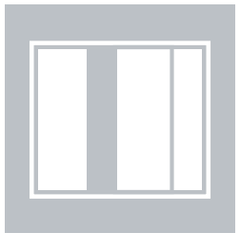

interior sliding doors

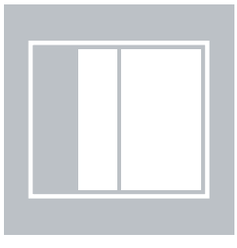

wardrobes

Slidix TE

For sliding and shower doors

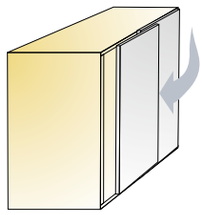

- Movement type: Inside-out
- Stroke length in mm: 50
- Damper type: Hydraulic

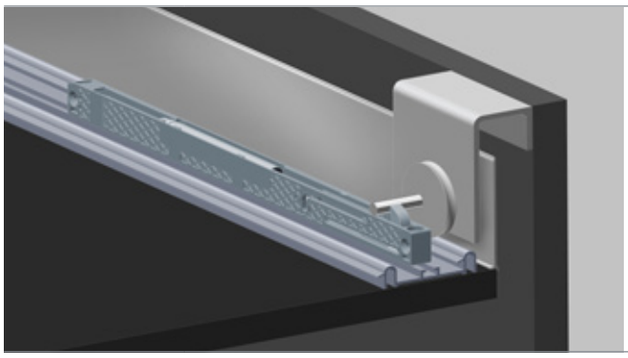

Technical details

Door weight (kg)	Spring force (N)	Item number
15	4.3	975-9315-380
25	7.5	975-9317-380
40	10	975-9321-380
60	13	975-9483-380

Slidix TE

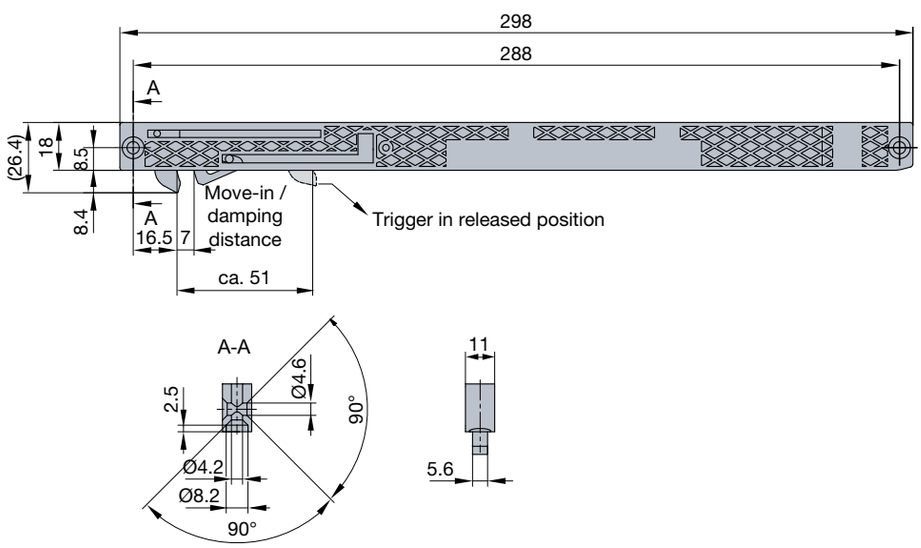

100 Pcs Made of plastic

Activators

Slidix activators
see pages 4.21 and 4.22

- Smooth and reliable soft closing of various sliding doors, including shower cabins and other glass sliding doors
- Titus hydraulic dampers ensure smooth and even soft closing action

Capacity

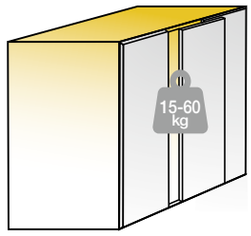

Works in range from 15-60 kg

Application details

Drawing shows the needed distance in mounting between Slidix mechanism and activator SP14.
Other activators available, trial mounting is recommended.

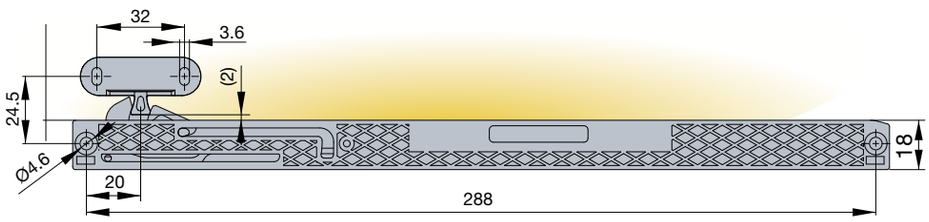

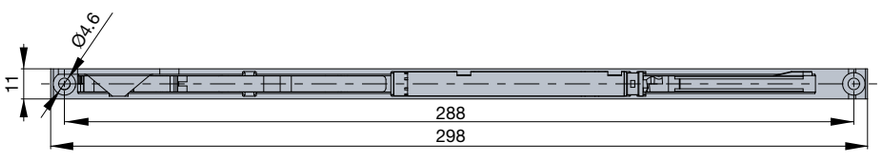

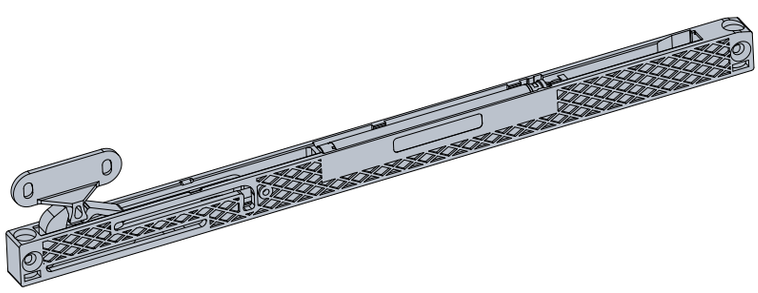

Applications options

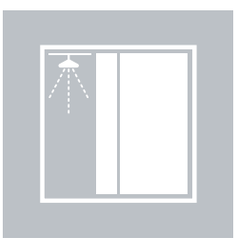

shower doors

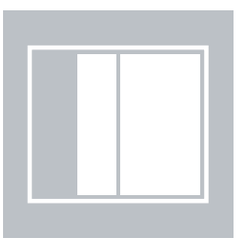

wardrobes
sliding doors

interior sliding doors

walk-in closets

Slidix TF

For interior sliding door systems

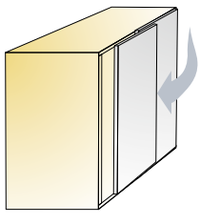

- Movement type: Outside-in
- Stroke length in mm: 100
- Damper type: Hydraulic

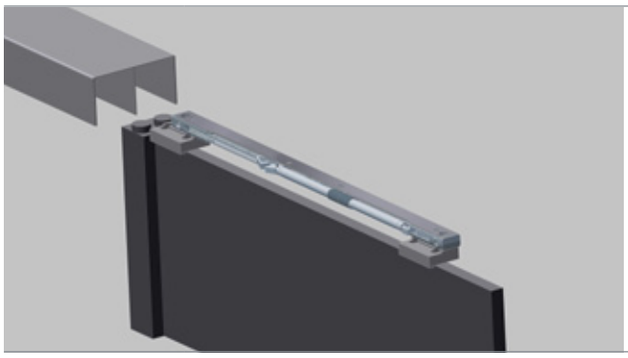

Technical details

Door weight (kg)	Spring force (N)	Item number
40	10	975-9373-040
60	13	975-9374-040
80	13	975-9375-040
100	17	975-9376-380
120	17	975-9377-380

Slidix TF

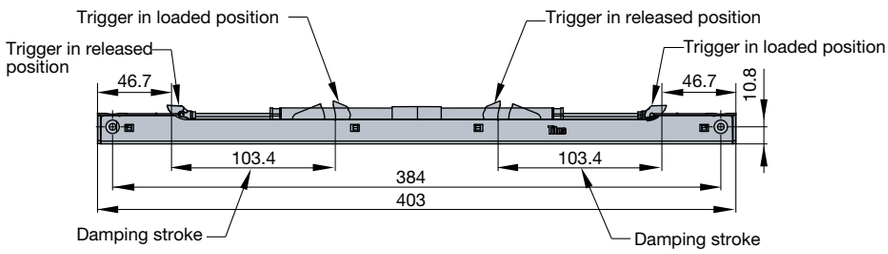

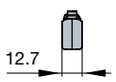

100 Pcs Made of plastic, steel cover

Activators

Slidix activators
⇢ *see pages 4.21 and 4.22*

- Smooth and reliable soft closing of various sliding doors
- Titus hydraulic dampers ensure smooth and even soft closing action

Capacity

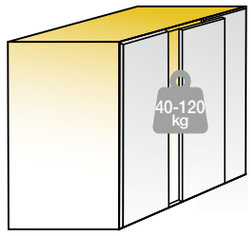

Works in range from 40kg to 120 kg

Application details

Drawing shows the needed distance in mounting between Slidix mechanism and activator SP14.
Other activators available, trial mounting is recommended.

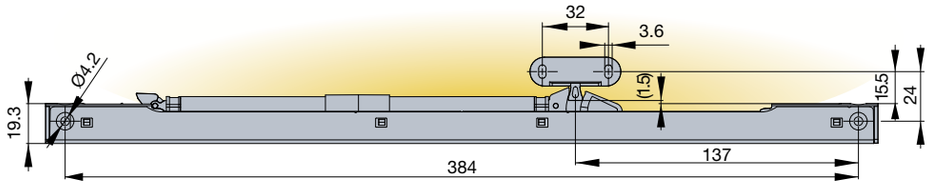

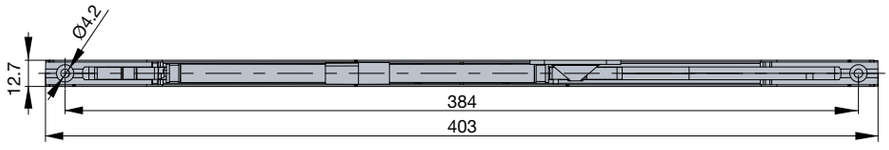

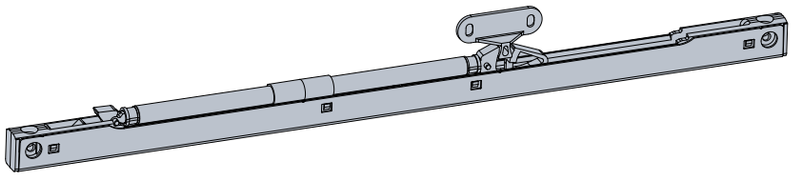

Applications options

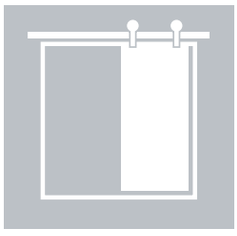

barn doors

room dividers

pocket doors

Slidix Activators

	Technical details	Item number	Grey
Activator TSC Plus	For Slidix Centro, II, TA, TB, TC, TE, TF	**974-4752**	380

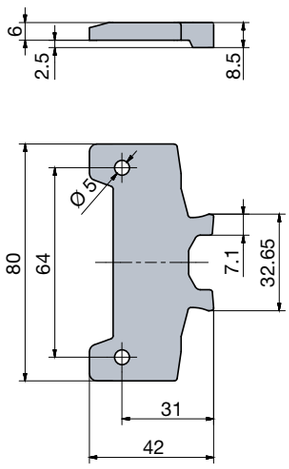

100 Pcs Made of plastic

Activator TX40	For Slidix II, TA, TB, TC, TE, TF	**974-4757**	380

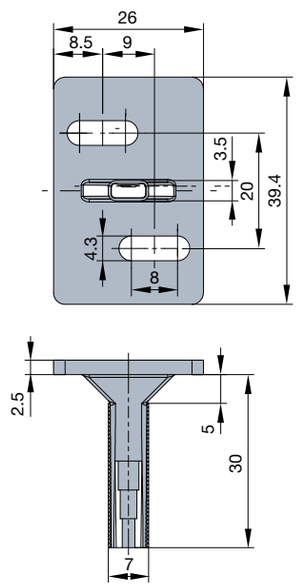

100 Pcs Made of zamak

Slidix Activators

For Slidix mechanisms

	Technical details	Item number	White	Grey	Black
Activator SP14	For Slidix II, TA, TB, TC, TE, TF	**974-4748**		380	390

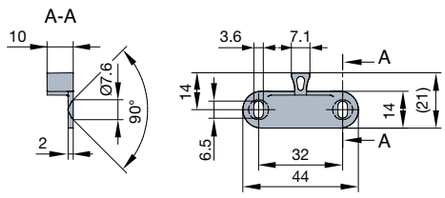

100 Pcs Made of plastic

Activator SMZ	For Slidix II, TA, TB, TC, TE, TF	**974-4747**	350	380	

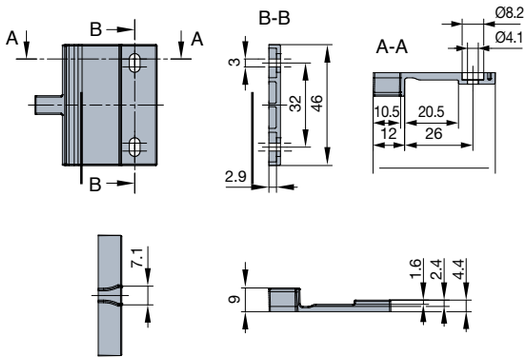

100 Pcs Made of plastic

Activator TS17	For Slidix II, TA, TB, TC, TE, TF	**974-4753**			390

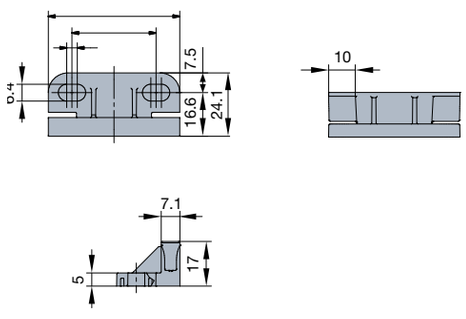

100 Pcs Made of plastic

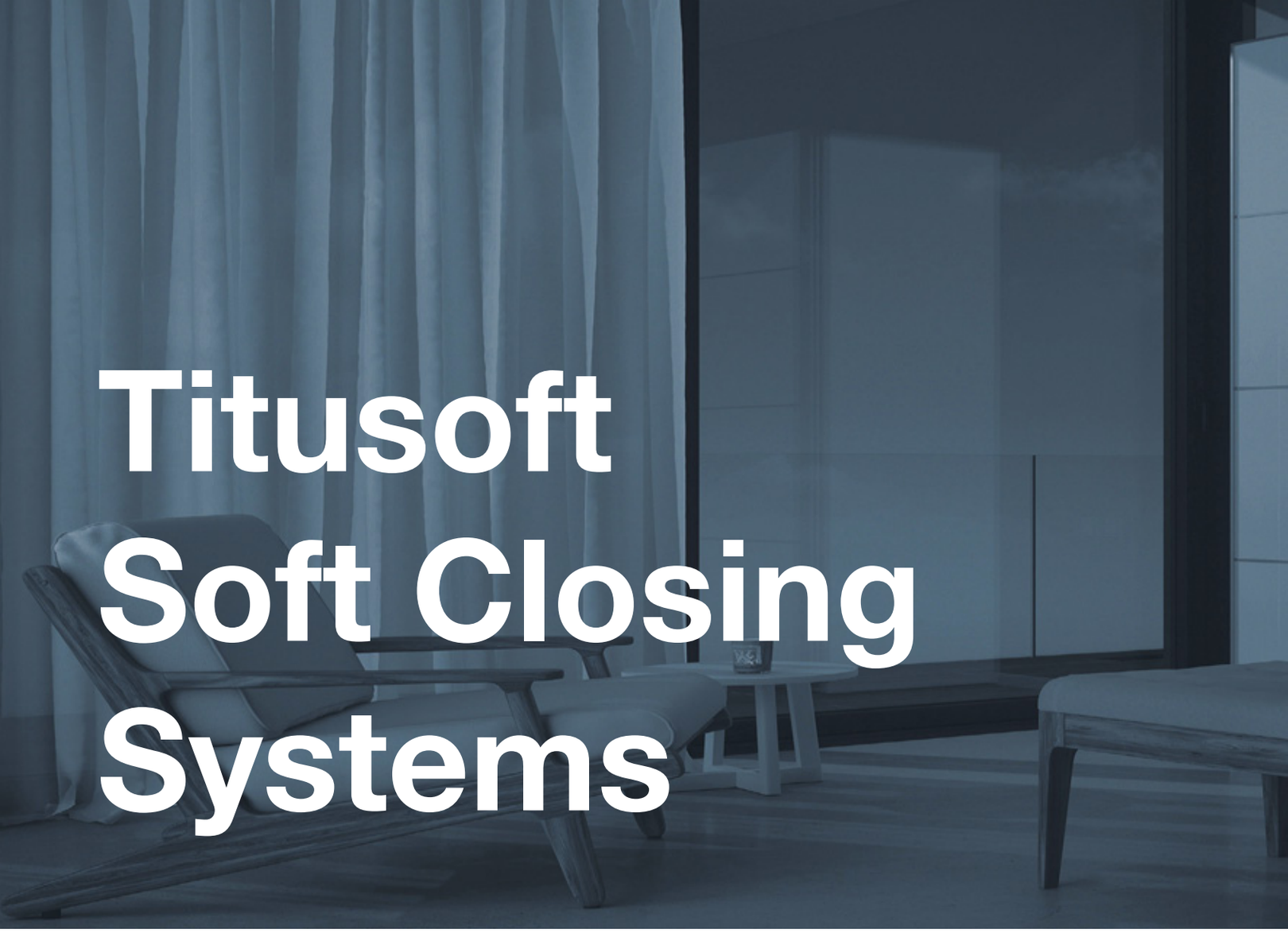

Titusoft Soft Closing Systems

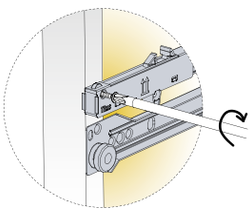

Simple and intuitive mounting

- No pre-drilling required
- Non-handed
- User friendly

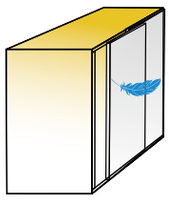

Smooth and reliable

- Silent in use
- Effortless opening with low pull-out force

Titus damper inside

- Effi cient damping on various door sizes and weights
- Confi dentClose assured

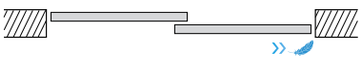

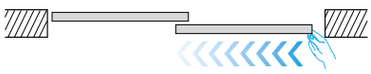

Fully controllable damping path

- Smooth and even soft closing on various dimensions and weights
- Reliable damping at any closing speed
- Silent closing without a rebounce

Comfortable door opening

- Low pull-open force
- Effortless opening

Titusoft WD

Soft Closing System for Wooden Drawer

For wooden drawer with roller runners

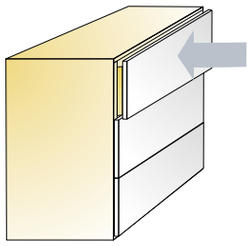

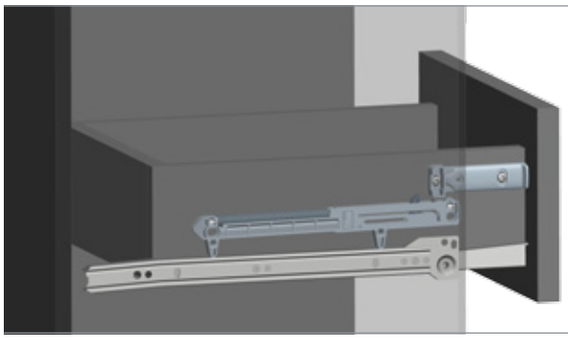

Technical details

Titusoft WD

	Item number	Grey	White	Zinc plated blue
Titusoft mechanism	**973-0X35** →	380		
Activator	**973-4451** →	380	350	

Titusoft mechanism

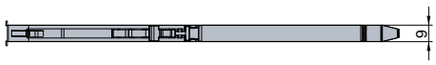

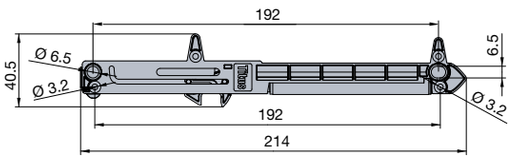

Bag of 1
973-0X35-380-K2 120 Bags
- 1 Titusoft mechanism
- 1 activator
- 2 screws Ø3.5mm x 20mm
- 2 screws Ø3.5mm x 12mm
- 1 mounting instruction sheet

Bag of 2
973-0X35-380-K1 80 Bags
- 2 Titusoft mechanisms
- 2 activators
- 4 screws Ø3.5mm x 20mm
- 4 screws Ø3.5mm x 12mm
- 1 mounting instruction sheet

Activator

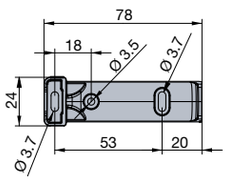

250 Pcs
200 Pcs (973-0X35 + activator)

Made of plastic

- Works with most roller runner drawer slides
- Easy, intuitive mounting
- Smooth, soft closing action independent of drawer hardware
- Optimal closing speed
- Non-handed design

Capacity chart

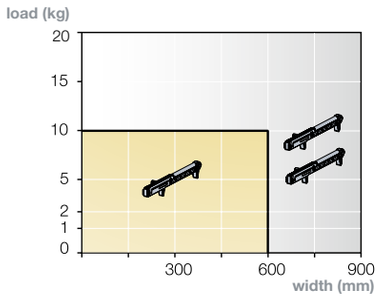

Mount 1 or 2 Titusoft mechanisms depending on drawer weight and width

Mounting details

1.

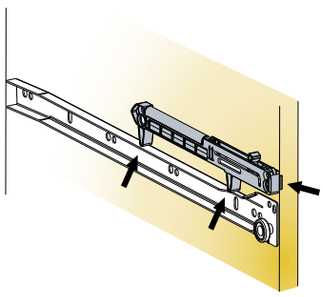

Position the Titusoft mechanism on the top of the drawer slide

2.

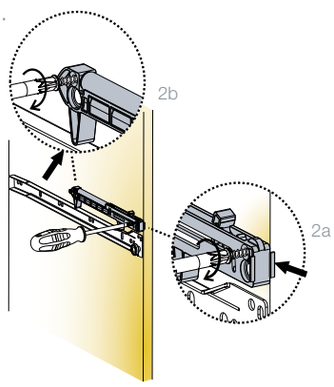

Fix with 2 screws L=20mm

3.

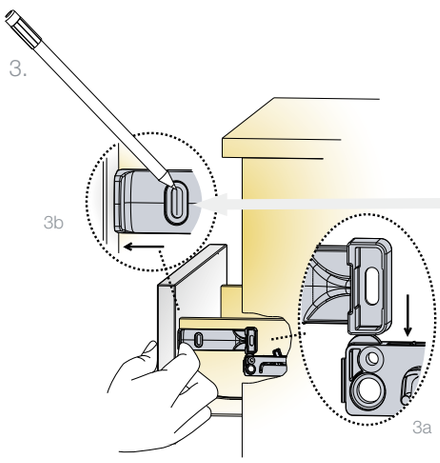

1. Rest the activator against the drawer front
2. Align the vertical position of the activator with the top of the Titusoft mechanism and mark the screw locations

4.

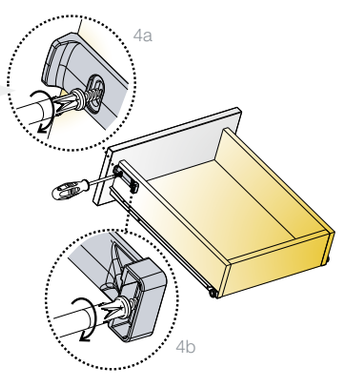

Fix with 2 screws L=12mm

A trial mounting is always recommended. Please contact Titus Group or your local distributor for further technical assistance.

Titusoft MD
Soft Closing System for Metal Box

For metal boxes

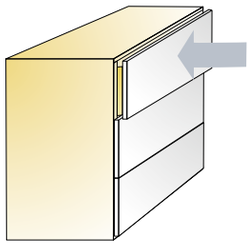

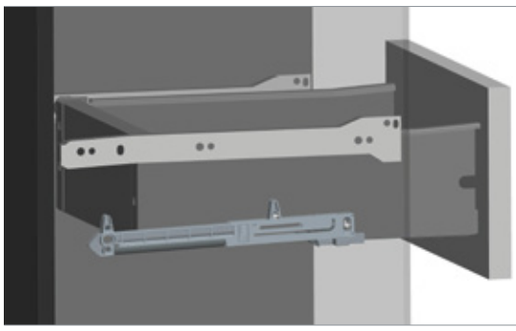

	Item number	Grey	White	Light blue
Titusoft mechanism for factory mounting	**973-0X95** ⟶	380		
Titusoft mechanism for retrofit mounting	**973-0X39** ⟶	380		309
Activator	**973-4125** ⟶		350	
Mounting jig	**973-4126** ⟶			

Titusoft MD

Titusoft mechanism

Activator

Mounting jig

Bag of 1
973-0X39-380-K2 90 Bags
- 1 Titusoft mechanism
- 1 activator
- 1 mounting jig
- 4 screws
- 1 mounting instruction sheet

Bag of 2
973-0X39-380-K1 60 Bags
- 2 Titusoft mechanisms
- 2 activators
- 1 mounting jig
- 8 screws
- 1 mounting instruction sheet

250 Pcs
150 Pcs (973-0X39 + activator)

Made of plastic

Technical details

Retrofit mounting

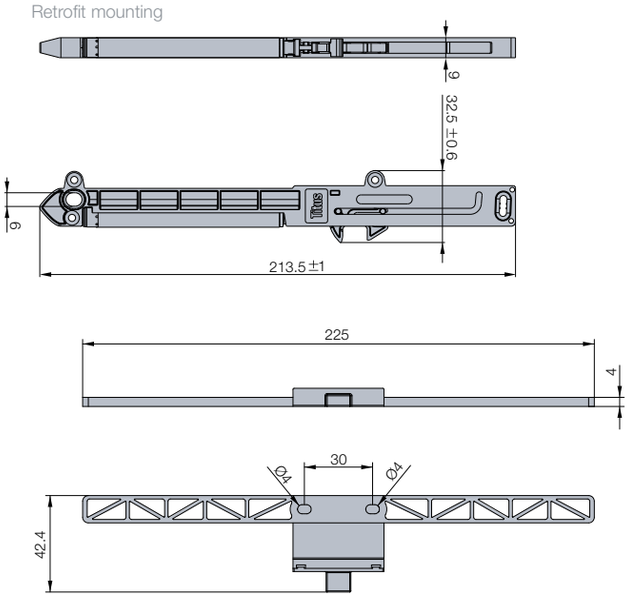

Factory mounting (system holes)

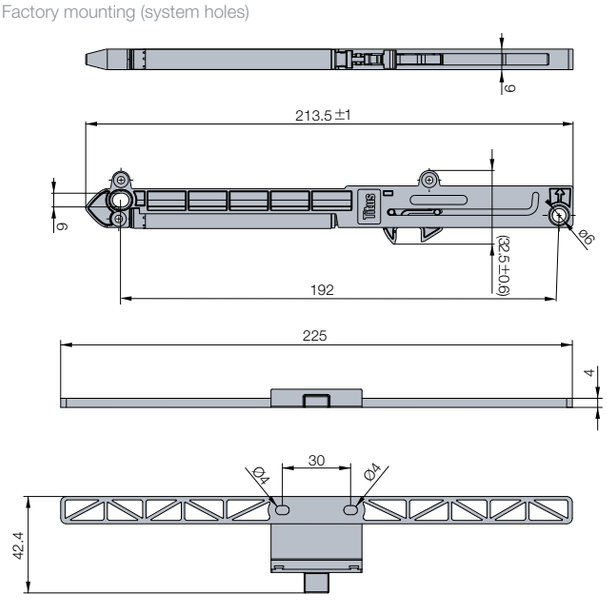

- One-for-all soft closing for single skin metal boxes
- Allows for easy factory mounting or retrofit application
- Intuitive positioning
- Preserve the life-time of the drawer

Capacity chart

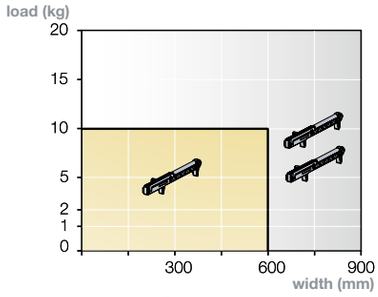

Mount 1 or 2 Titusoft mechanisms depending on drawer weight and width

Mounting details

Retrofit mounting

1.

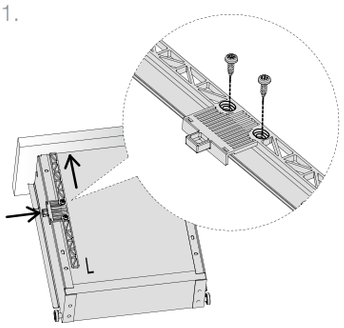

2.

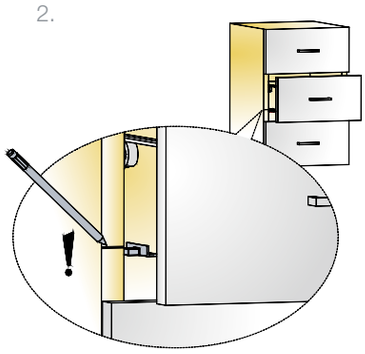

3.

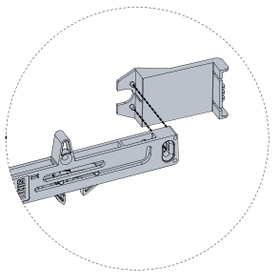

4.

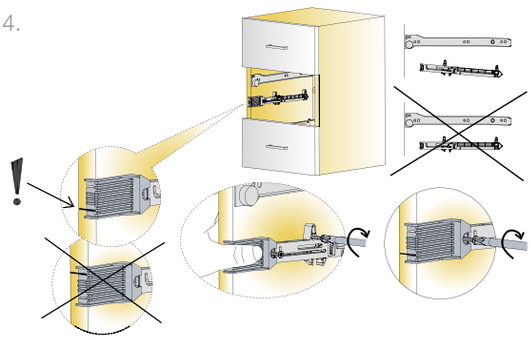

5.

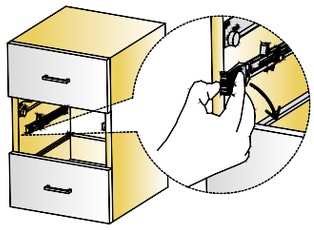

Factory mounting

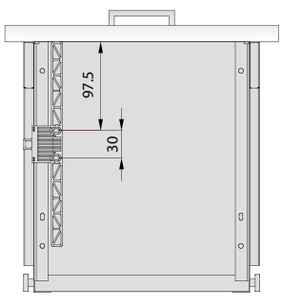

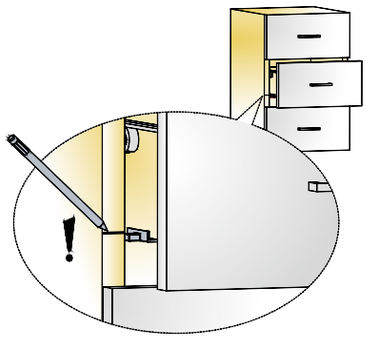

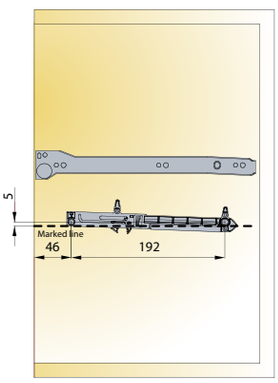

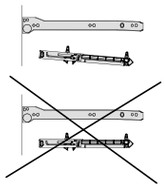

A trial mounting is always recommended. Please contact Titus Group or your local distributor for further technical assistance.

Titusoft FF

Soft Closing System for Face Frame Cabinets with Wooden Drawer

For wooden drawer with roller runners

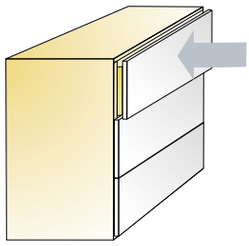

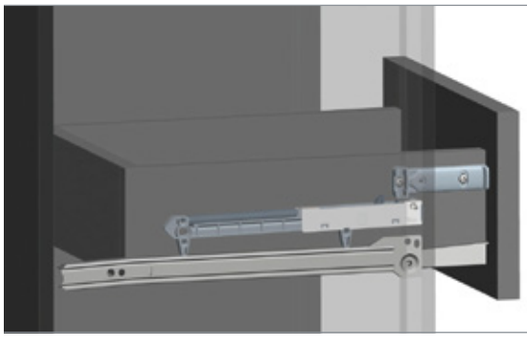

Technical details	Item number	Grey	White
Titusoft FF			
Titusoft mechanism	973-0M99 →	380	
Activator	973-4451 →	380	350

Titusoft mechanism

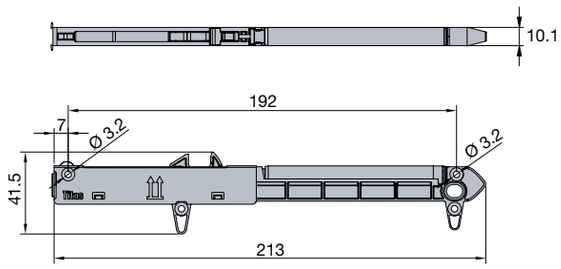

Bag of 1
973-0M99-380-K1 300 Bags
- 1 Titusoft mechanism
- 1 activator grey
- 2 screws Ø3.5mm x 25mm
- 2 screws Ø3.5mm x 12mm
- 1 mounting instruction sheet

Activator

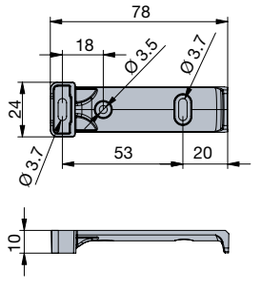

250 Pcs Made of plastic

- Easy, intuitive mounting
- Universal application will fit most standard drawers
- Smooth, soft closing action independent of drawer hardware
- Non-handed design

Capacity chart

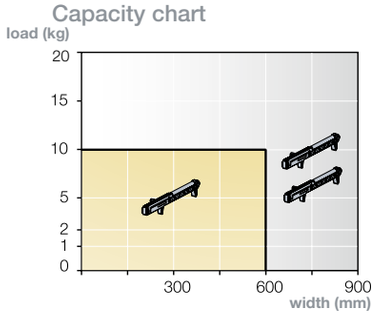

Mount 1 or 2 Titusoft mechanisms depending on drawer weight and width

Mounting details

1.

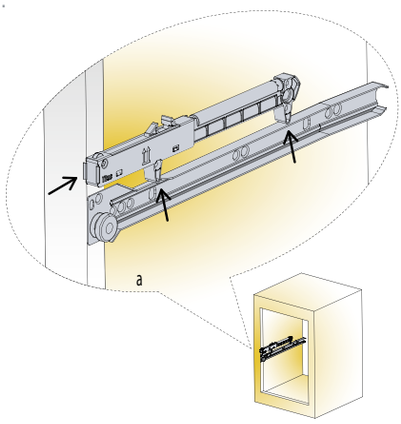

Position the Titusoft on the top of a drawer slide

2.

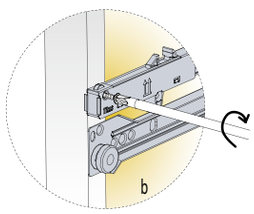

Screw the Titusoft mechanism to the face frame

3.

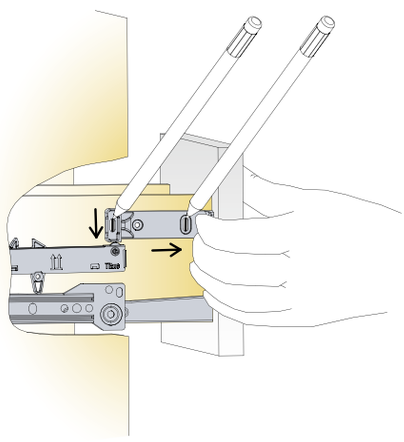

Align the activator with the top of the Titusoft mechanism and fix with two screws

4.

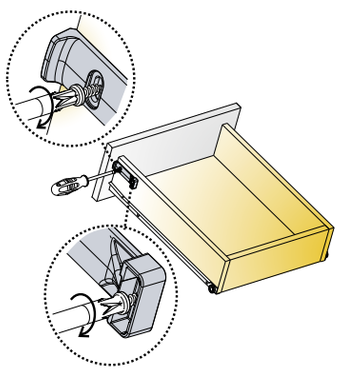

Fix with 2 (3) screws L=12mm

A trial mounting is always recommended. Please contact Titus Group or your local distributor for further technical assistance.

Titusoft SD100s
Add-on Damper for Set 200

For bottom running sliding door systems

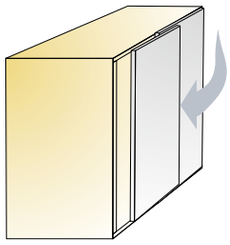

	Item number	Grey
Titusoft SD100s	973-9060 ⇢	380

Technical details

Released position

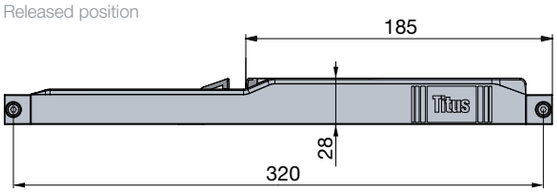

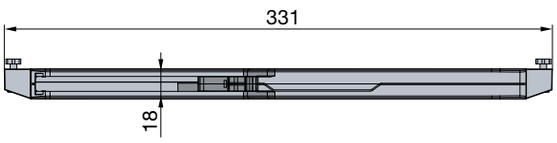

Drawings show example with components presented above

The system consists of the folowing components		Quantity for 2-door cabinet
Standard component		
Titusoft SD100s mechanism		2 pcs
Customized components to suit the customer's sliding door system		
Attachment base		4 pcs
Nut		4 pcs
Screw M4 x 16		4 pcs

Activator and attachments on this page suit Set200.
We offer a customer dedicated design as per its requirements
⇢ *contact Titus Group representative for more information*

25 sets

- Non-handed design
- Effortless door opening with low pull-out force
- Efficient damping on different door sizes
- Slim design for concealed application

Titusoft SD100s capacity

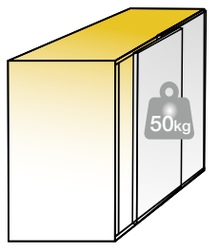

Up to 50kg per door

Set 200
→ *see page 4.37*

Mounting details

Non-handed design

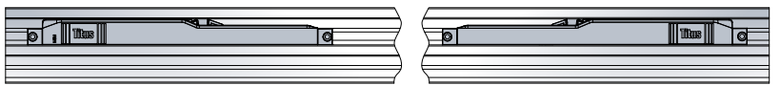

Mount Titusoft SD100s on top rail on both sides of the cabinet.
(1 pc Titusoft SD100s per 1 door)

Mounting position

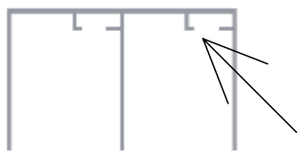

Titusoft SD100s is mounted into
the top profile

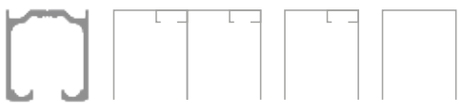

Fit variuos U and double U shaped profiles

Space requirements

Slim design with 30mm height allows for concealed application

For further information please contact your
Titus Group representative.

Titusoft SD100
Add-on Damper for Sliding Door

For top running sliding door systems

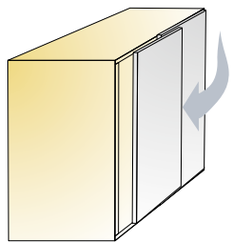

	Item number	Grey
Titusoft SD100	973-9018 →	380

Technical details

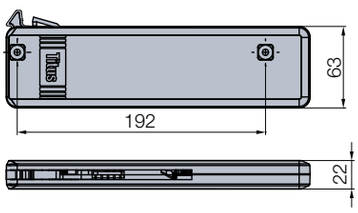

Drilling details

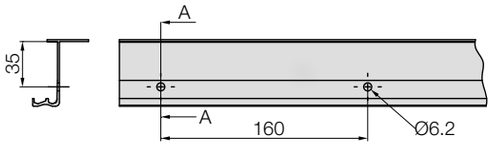

32 Sets

The system consists of the following components	Quantity for 2 door cabinet
Standard component	
Titusoft SD100 mechanism	2 pcs
Customized components to suit the customer's sliding door system	
Base	4 pcs
Stopper	2 pcs
Activator for internal door	1 pc
Activator for external door	1 pc
Accessories	
Screws	
Countersunk screw D4x40mm	4 pcs
Countersunk screw D4x25mm	4 pcs
Chipboard screw Ø4x16mm	3 pcs
Euroscrew Ø6.3x15mm	2 pcs
Mounting instructions	1 pc

- ConfidentClose
- Intuitive mounting
- Non-handed design
- Efficient damping on different door sizes
- Smooth and controlled closing motion

Titusoft SD100 capacity

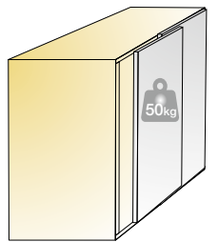

Up to 50kg per door

Mounting details

Non-handed design

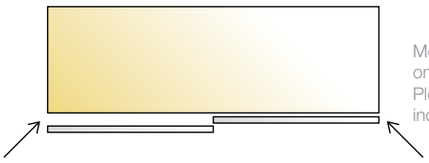

Mount Titusoft SD100 on top rail
on both sides of the cabinet.
Please follow mounting instructions
included in a set.

Mounting positions

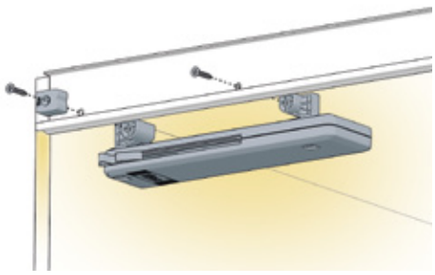

Titusoft SD100 mechanism position

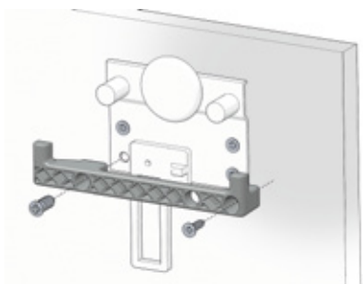

* Activator for internal door position

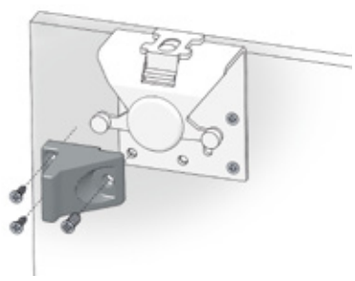

* Activator for external door position

Click to engage

distrib

For further information please contact
your Titus Group representative.

Sliding Door Solutions for Bottom Running Door
Information

Introduction

Application

For built-in cabinets
Walk-in closets
Room-dividers
Wardrobes

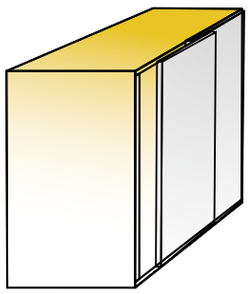

For 2 and 3 door applications

Load capacity

Maximum door weight is 50 kg

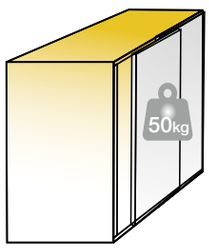

Door adjustment

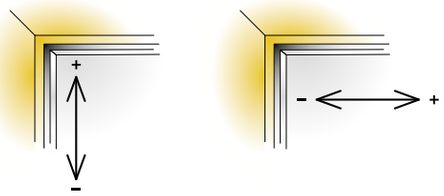

Height adjustment

Side adjustment

Adjustments

Height adjustment

Height adjustment is done through the adjustment screw on the bottom carriage

Adjustment range depends on the preset position.
Carriage is factory preset to the lowest value.

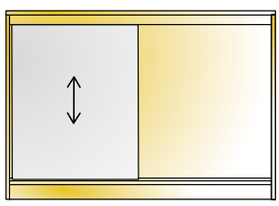

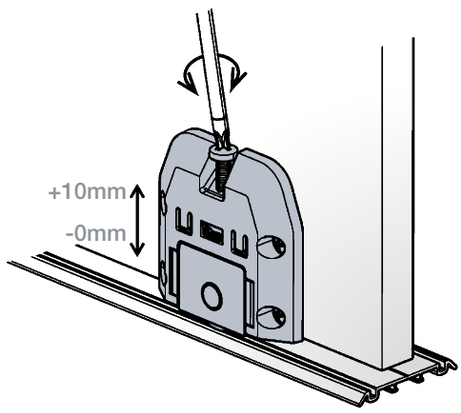

Side adjustment

Side adjustment is done through stopper position.

The adjustment defines the gap between doors and cabinet side/wall

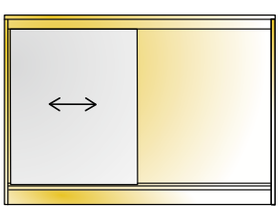

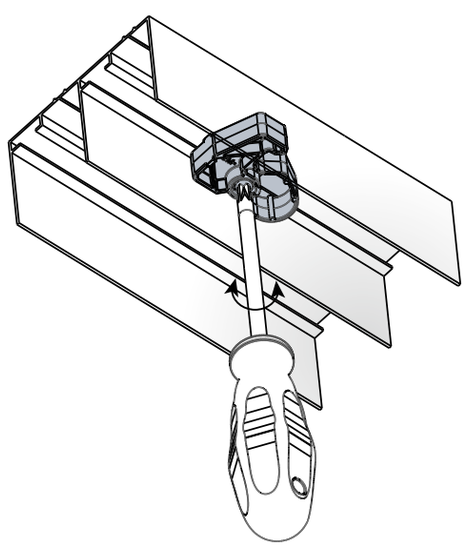

Stopper limits and stops the motion of the cabinet door

Set 200
Sliding Door Mechanism

For bottom running sliding door systems

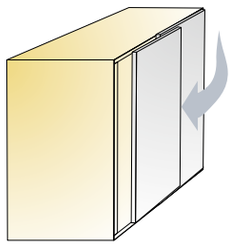

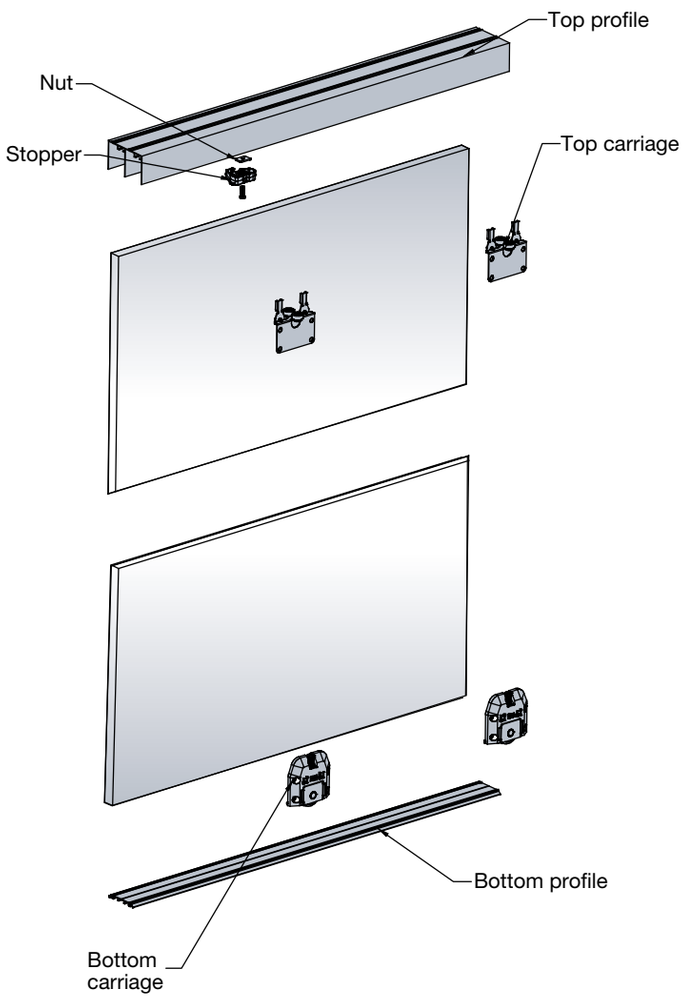

20 sets

Item number for set	Set for 2-doors	Set for 3-doors
610-9691-380 ⇢	K1	K2
Set consists of the following components		
Bottom carriages	4 pcs	6 pcs
Top carriages	4 pcs	6 pcs
Pan head screws	32 pcs	48 pcs
Stopper	4 pcs	6 pcs
Nut for stopper	4 pcs	6 pcs
Screw M4 x 16 for stopper	4 pcs	6 pcs
Self adhesive tape	5 pcs	5 pcs
Mounting instructions	1 pc	1 pc

Rails and accessories are not included in the set and can be ordered separately

Rails

Top rail
⇢ see page 4.39

Bottom rail
⇢ see page 4.39

Accessories

Titusoft SD100s
⇢ see page 4.31

- Door weight max. 50kg
- Door thickness 18-22mm
- Door material wood (chipboard, MDF, solid wood)

Mounting details

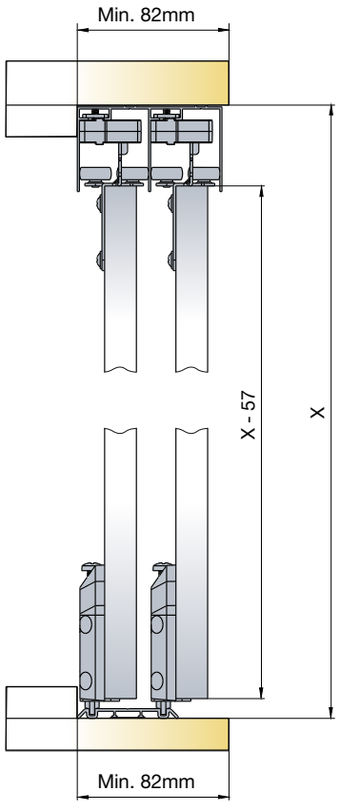

X = space available between top and bottom panel
X - 57 = door height

Door drilling pattern

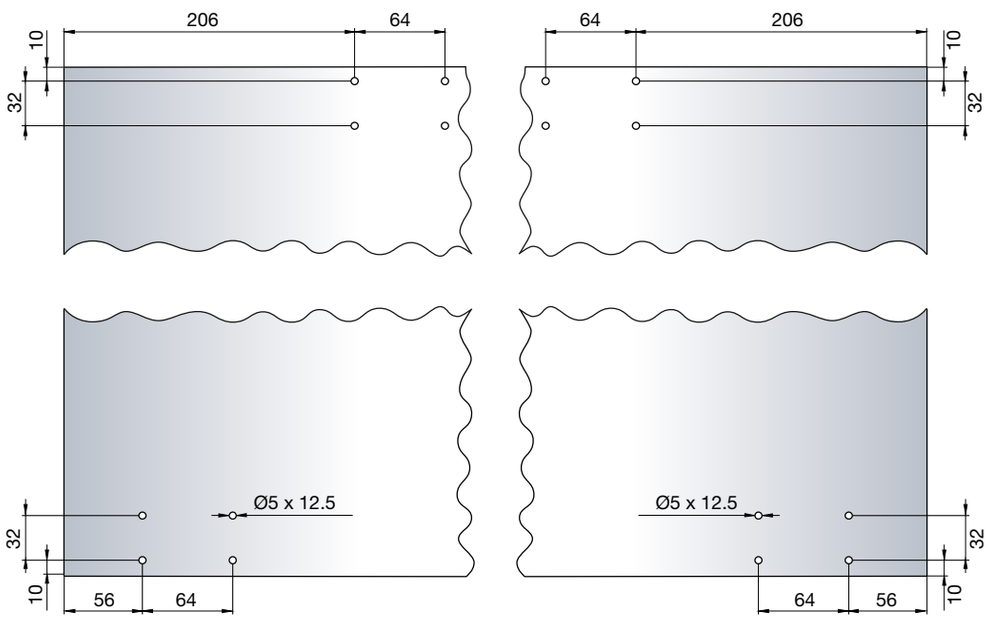

Top and bottom carriage drilling positions

Rails
For Set 200

Screws for top rail are not supplied and depend on the application (cabinet, built-in cabinet). Bottom rail is fixed with self-adhesive tape. Rail is pre-drilled and ready to install.

Technical details

Top rail

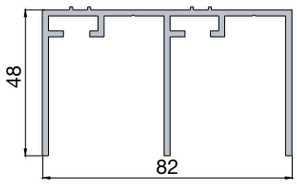

Rail lenght	Item number
2000	610-9692-070-K1
2400	610-9693-070-K1
3000	610-9694-070-K1

*other lenghts upon special request

Bottom rail

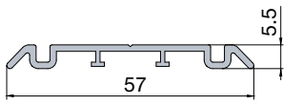

Set consists of:

Top rail — 1 pc

Bottom rail — 1 pc

5 sets